Aqua Creek Products
THE LEADERS IN RECREATION, FITNESS AND ABILITY!
9889 Garrymore Ln
Missoula, MT 59808
888-687-3552 | +1-406-549-0769
www.aquacreek.com

# Scout Excel Wood Deck Anchor

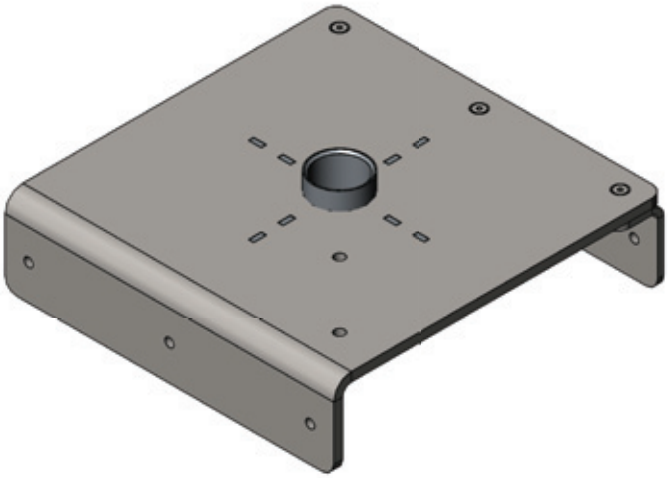

**PART #: F-842SWDA**

**MANDATORY**
LEAVE THIS MANUAL WITH LIFT OWNER

Read and follow all instructions.
Lift safety can only be ensured if the lift is installed and operated according to these instructions.

- NEVER permit children to play on or around the lift
- Do not allow children to use the lift without adult supervision
- NEVER apply direct water pressure to the electronics
- NEVER use the lift with a dry pool

## READ CAREFULLY

Check entire box and all packing materials for parts. Before beginning assembly, read the instructions and identify parts using the figures and parts listed in this document.

It is critical that all parts be carefully inspected prior to installation. If any damage occurred in transit, Aqua Creek Products, LLC must be notified within three days of receipt of unit.

Proper installation cannot be overstressed, as an improper installation voids Aqua Creek's warranty and may affect the safety of the user.



Copyright © 2021 Aqua Creek Products All Rights Reserved

Revised 5/6/21

# Parts List

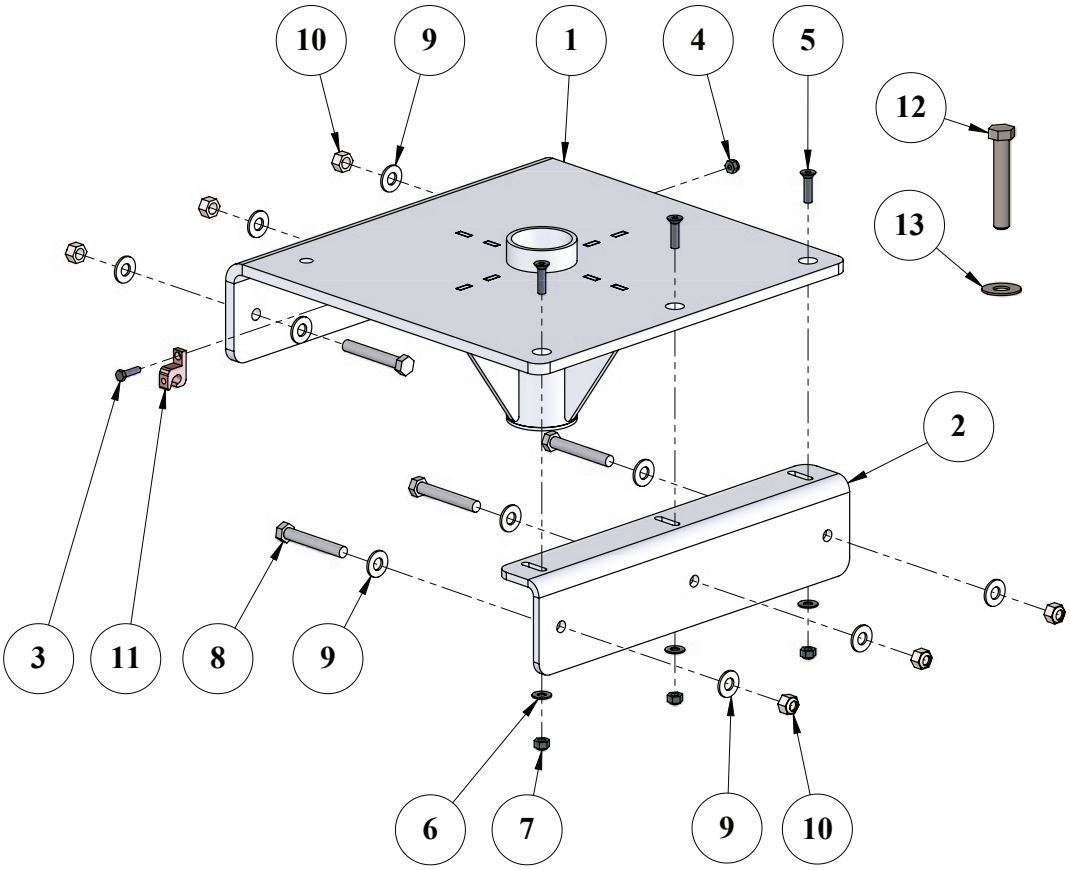


| ITEM # | QTY | PART # | DESCRIPTION |
|---|---|---|---|
| 1 | 1 | SWDA-100-30 | SCOUT WDA MAIN WELDMENT |
| 2 | 1 | SWDA-120-10 | SCOUT WDA MOUNTING BRACKET |
| 3 | 1 | BH 10 X 3/4 | BOLT, 316 SS, 10-24 X 3/4 HCS |
| 4 | 1 | NN 10 | BUT, 316 SS, NYLOCK, #10-24 |
| 5 | 3 | BC 1/4 X 1 | BOLT, 316 SS, 1/4-20 X 1 FHSCS |
| 6 | 3 | WF 1/4 | WASHER, FLAT, 1/4, 316 SS |
| 7 | 3 | NN 1/4 | NUT, 316 SS, NYLOCK, 1/4"-20 |
| *8 | 6 | BH 3/8 X 2-1/2 | BOLT, 316 SS, 3/8-16 X 2 1/2 HCS |
| *9 | 12 | WF 3/8 | WASHER, FLAT, 3/8, 316 SS |
| *10 | 6 | NN 3/8 | NUT, 316 SS, NYLOCK, 3/8"-16 |
| 11 | 1 | GBL-4DB | LUG, IN GROUND GROUNDING LUG |
| 12 | 1 | BH 1/2 X 3 | BOLT, 316 SS, 1/2-13 X 3 HCS |
| 13 | 1 | WF 1/2 | WASHER, FLAT, 1/2" |

***Hardware is not supplied since the type and length of bolt may vary depending on your particular application. Depending on the accessibility to your deck joists, you will need to source the proper length 3/8" stainless steel hex bolts to drill throught the joist(s) and secure with nuts and washers or 3/8" stainless steel lag bolts. Aqua Creek recommends type 316 Stainless on all individually sourced hardware if available.**



Copyright © 2021 Aqua Creek Products All Rights Reserved

# Installation Instructions

**This product has been tested, and is only intended for use on a wood deck where the joists are located 16" on center. Modification of the deck may be required. Do not use this product for situations it was not intended for.**

**For commercial applications, refer to the required clear deck space and other measurements in FIG 2 below.**

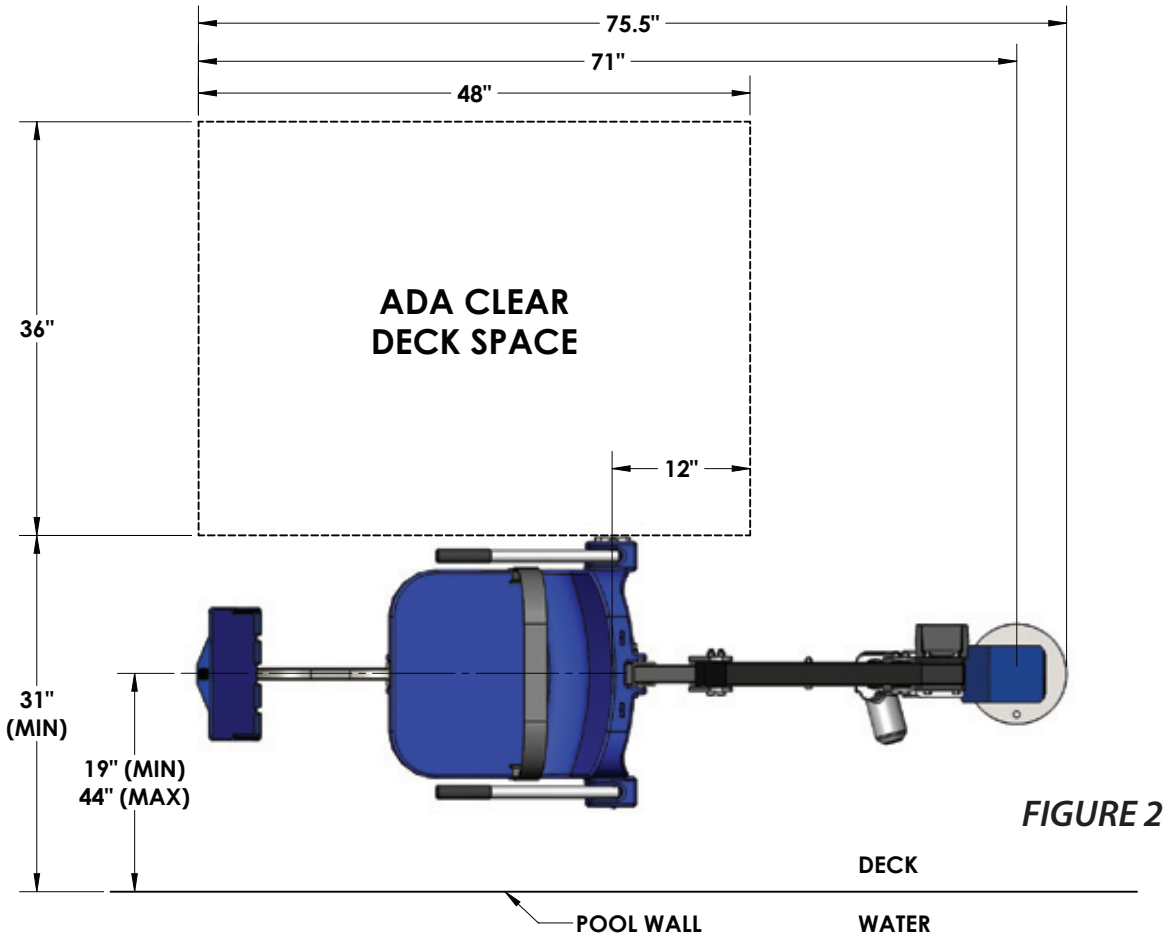


*FIGURE 2*

**Refer to FIG 3 on the next page for the following step-by-step instructions:**

1. **Find a location between two joists to safely drill a 2 1/2" to 3" hole for the main anchor assembly. Mark the center of the hole.**
2. **Before drilling the main hole, measure 2 1/2" over and 2 1/2" down (See FIG 3 on page 4) and mark the 5/8" hole center for the fixing anchor.**
3. **Drill the holes through the deck surface.**
   a. **The fixing anchor hole can be done in the next step if you prefer to allow for better alignment of the holes. Mark the hole from the bottom and drill up instead.**
4. **Adjust the width of the bracket to fit snug between the joists and push the anchor assembly up through the main hole. Make it fairly tight so the anchor assembly stays in place while the next holes are marked.**
5. **Mark the center of the six (6) holes for the mounting brackets.**
6. **Remove the anchor assembly and drill the holes with a 1/2" drill bit.**
7. **Re-insert the anchor assembly and secure in place using the 3/8" stainless steel bolts, washers and lock nuts sourced locally.**
8. **Bond the anchor according to local code requirements.**



Copyright © 2021 Aqua Creek Products All Rights Reserved

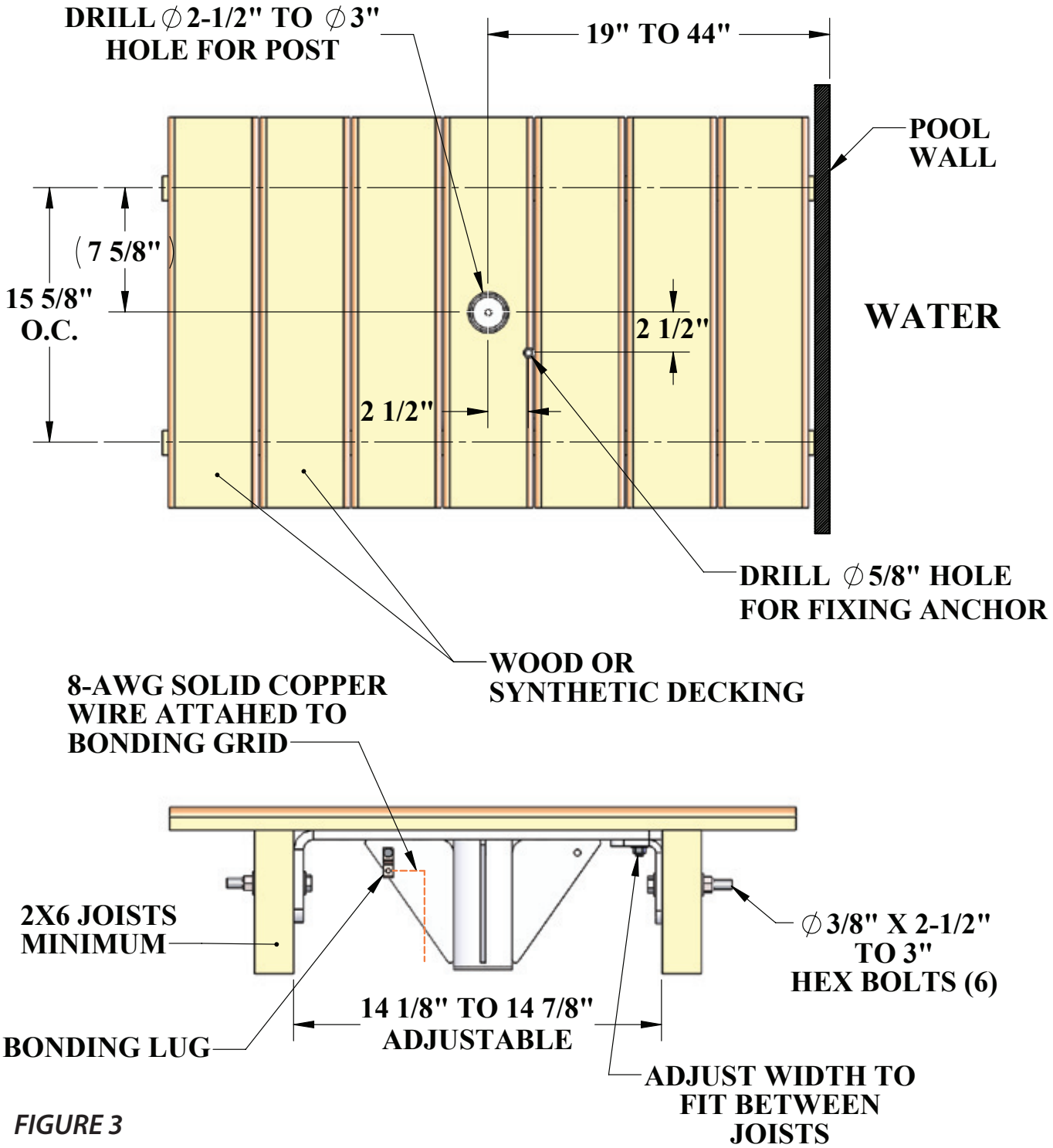


*FIGURE 3*

**NOTE: Product should be installed and bonded according to all local codes. Check local codes for bonding and other requirements.**



Copyright © 2021 Aqua Creek Products All Rights Reserved

# Installing Lift On Wood Deck Anchor

**The Scout Lift is shipped via truck and will arrive mostly assembled and ready to install into the anchor.**

1. **Carefully unpack the lift and inspect for any damages or missing components.**
2. **With another person, lift the main lift assembly off the crate and place over the top of the wood deck aligning the post at the bottom of the mast with the socket of the anchor and set into place.**
3. **Turn the lift so the fixing anchor lines up with the fixing anchor hole. Secure using the 1/2" x 3" stainless steel bolt and washer supplied with your lift.**
4. **Before using the lift test it to make sure it rotates left and right and goes up and down smoothly. Make sure it doesn't wobble as it rotates. Then the lift is ready for use.**

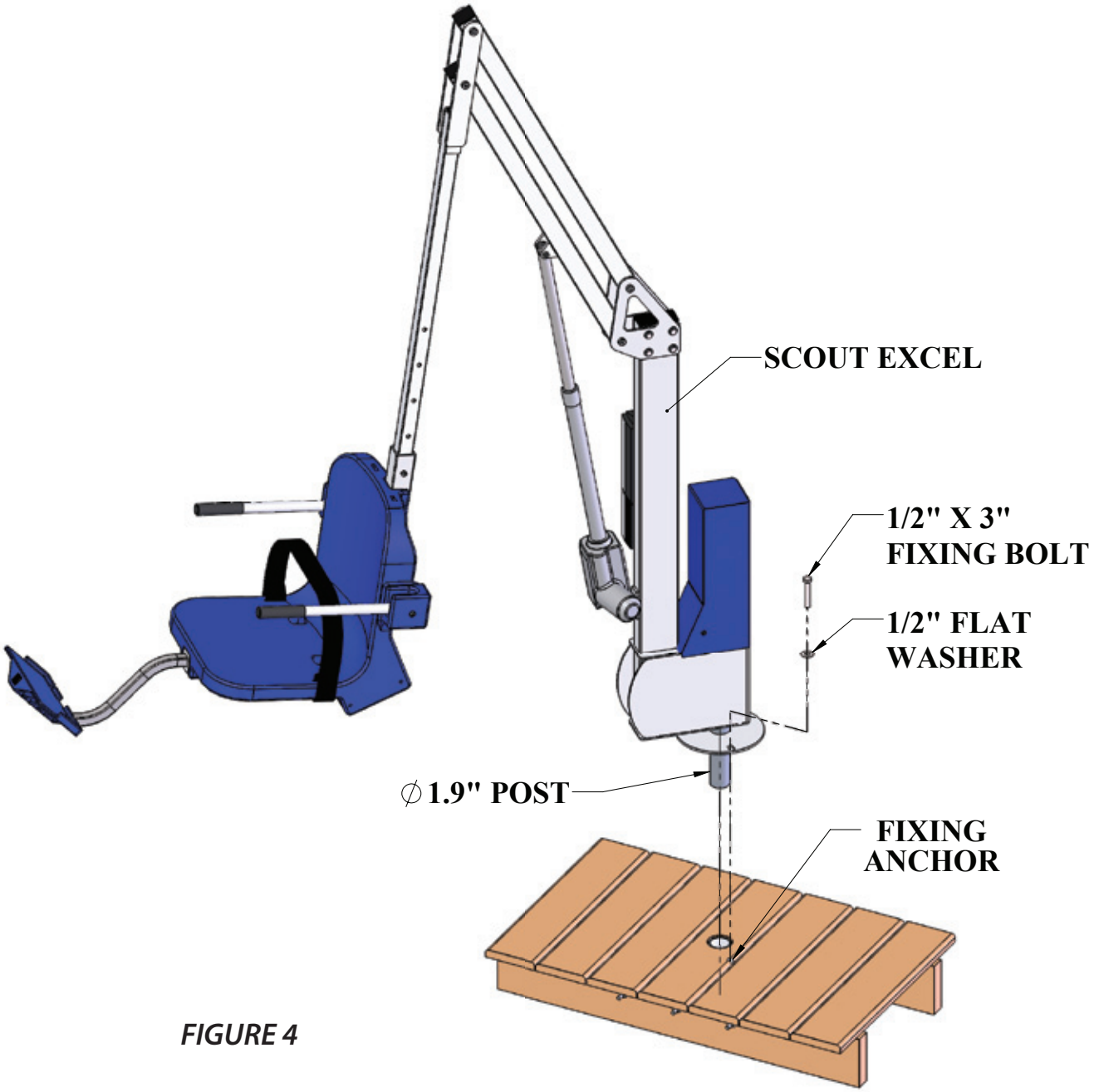


*FIGURE 4*



Copyright © 2021 Aqua Creek Products All Rights Reserved